AIM QuTE Final Dissemination Workshop
Czech Metrology Institute, Prague, 18-19 May 2016

ISTITUTO NAZIONALE DI RICERCA METROLOGICA

Digital bridges: activity at INRIM

L. Callegaro, V. D'Elia, M. Ortolano, F. Pourdanesh (l.callegaro@inrim.it)

Fully-digital bridge, two terminal-pair

- The bridge ratio accuracy is determined by the accuracy of the digital source employed
- Any complex ratio between impedances can be measured
- Average of two measurements by reversing the standards eliminates some source of errors
- Two terminal-pair definition is limited to mid-high impedance magnitudes (> 1 kΩ)

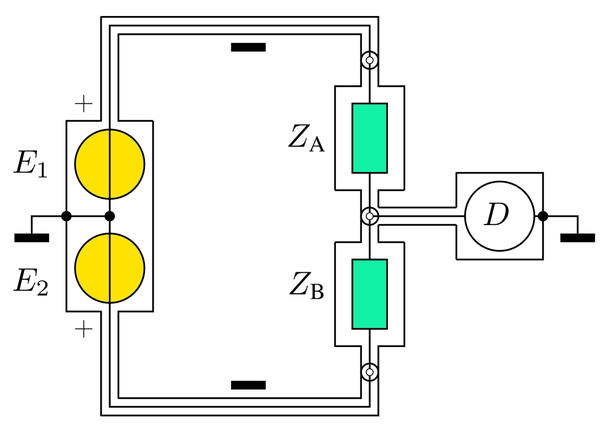

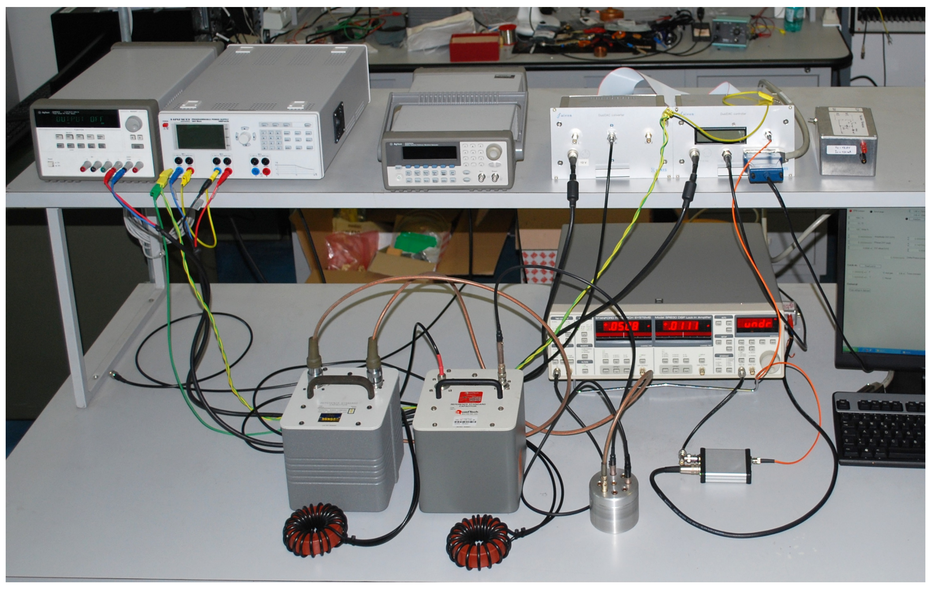

Digitally-assisted bridge, four terminal-pair

- Three arms, three standards: two (*R*, *C*) provide traceability, one is measured
- Accuracy is provided by the electromagnetic current comparator
- Careful choice of taps on the comparator allow to perform measurements in the whole complex plane
- Approximated four terminal-pair definition allow to extend the measurement range (10 Ω - 1 MΩ)

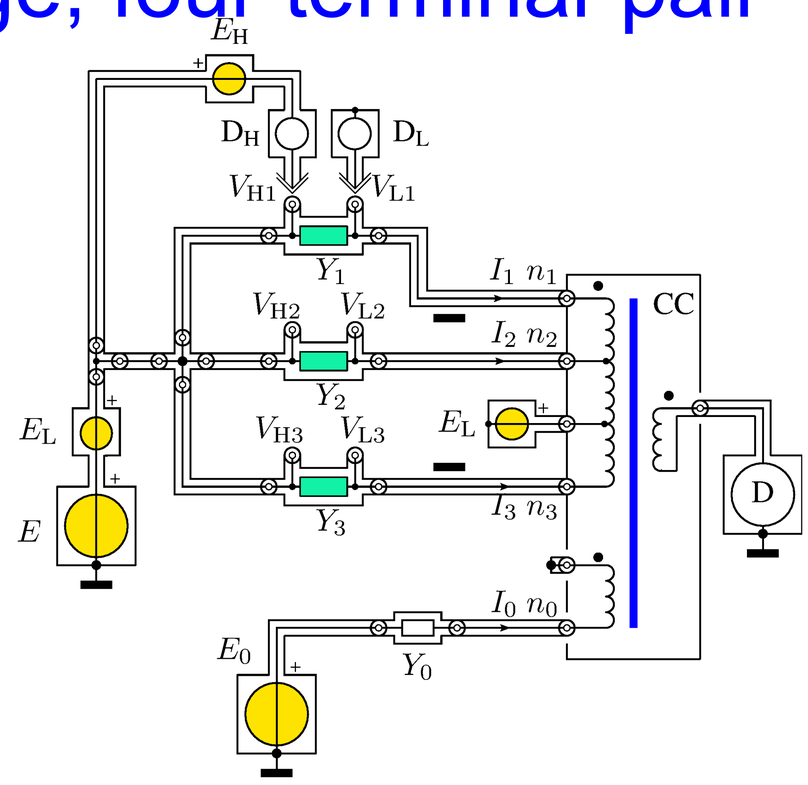

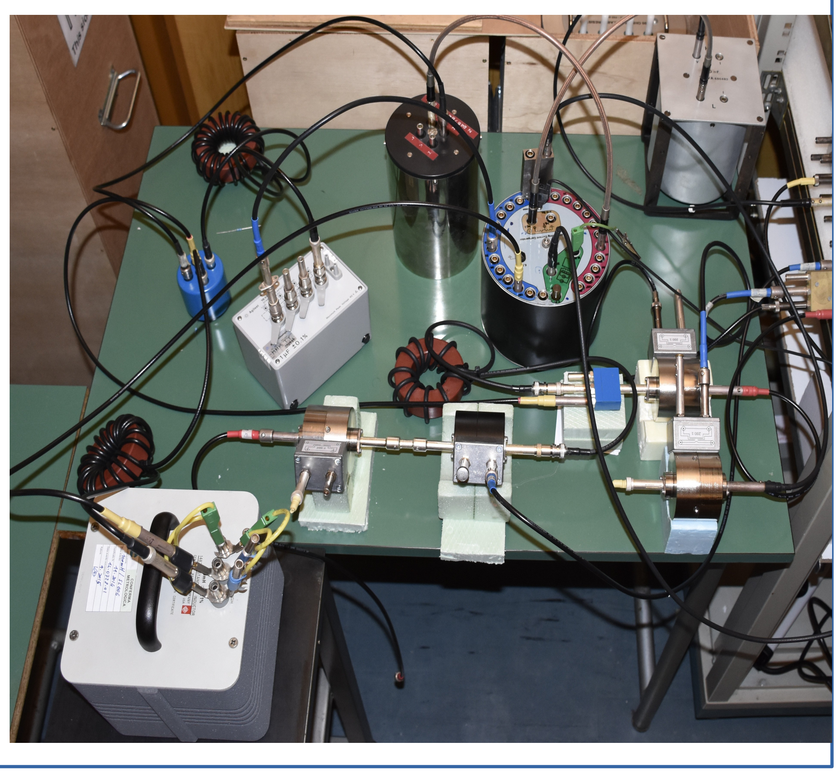

Measurements

Comparison between fully-digital and digitally-assisted bridges: consistency within parts in 10^5 or better

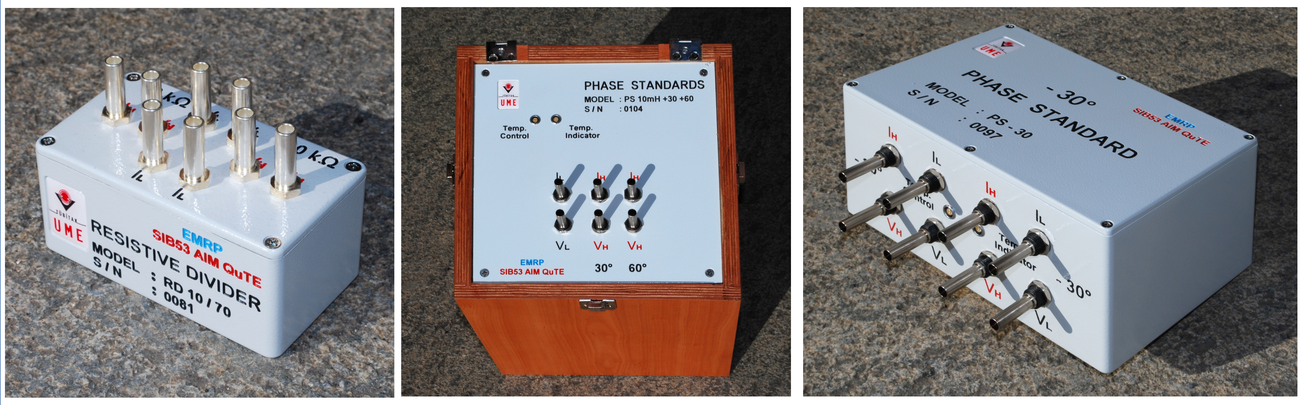

UME Resistive ratio standards, positive and negative phase standards

f/Hz	δ|Z|/|Z| ×10⁶	δ arg Z/° ×10⁶	Date
Phase standard no. 0097 left (−30°, 9.189 kΩ‖10 nF)			
999.9945	−7 ± 11	−5 ± 61	15/06/2015
Phase standard no. 0097 right (−30°, 91.89 kΩ‖1 nF)			
999.9945	−5.6 ± 5.3	388 ± 260	15/06/2015
Phase standard no. 0098 left (−60°, 125.3 kΩ‖2.2 nF)			
999.9945	−12.0 ± 5.2	449 ± 270	15/06/2015
Phase standard no. 0098 right (−60°, 12.53 kΩ‖22 nF)			
999.9945	−14 ± 12	708 ± 760	15/06/2015
Phase standard no. 0103 left (+60°, 3.62 kΩ+1 H)			
1003.0033	43 ± 10	4473 ± 650	30/07/2015
1002.9913	1 ± 13	227 ± 890	13/10/2015
Phase standard no. 0103 right (+30°, 11.0 kΩ+1 H)			
1003.0032	22 ± 7	−1974 ± 350	30/07/2015
1002.9913	−5 ± 10	−128 ± 660	14/10/2015
Phase standard no. 0104 left (+30°, 110 Ω+10 mH)			
1003.0033	51 ± 120	−4801 ± 3970	20/07/2015
Phase standard no. 0104 right (+60°, 36 Ω+10 mH)			
1003.0033	−47 ± 140	9630 ± 13 000	20/07/2015
Phase standard INRIM SL006/UME R1 +30° (+30°, 1100 Ω+100 mH)			
1003.0033	10 ± 22	−1890 ± 990	07/07/2015
Phase standard INRIM SL006/UME R1 +60° (+60°, 362 Ω+100 mH)			
1003.0033	−40 ± 27	2294 ± 2100	07/07/2015

On-site measurements at esz AG

Scientific outcome

M. Ortolano, V. D'Elia, L. Callegaro, "A three-arm four terminal-pair digitally-assisted current comparator bridge for the comparison of arbitrary complex impedances". 2016 Conference on Precision Electromagnetic Measurements, 10-15 July 2016, Ottawa, Canada, in press.

L. Callegaro, V. D'Elia, J. Kucera, M. Ortolano, F. Pourdanesh, B. Trinchera, "Self-compensating networks for four terminal-pair impedance definition in current comparator bridges", IEEE Trans. Instr. Meas.,vol. 65(5), 1149-1155, (2016)

L. Callegaro, "Traceable measurements of electrical impedance". IEEE Instrum. and Meas. Magazine,vol. 18(6), pp. 42-46 (2015).

L. Callegaro, V. D'Elia, M. Ortolano, F. Pourdanesh, "A Three-Arm Current Comparator Bridge for Impedance Comparisons Over the Complex Plane", IEEE Trans. Instr. Meas., vol. 64, p. 1466-1471 (2015).

L. Callegaro, V. D'Elia, M. Kampik, D. B. Kim, M. Ortolano, F. Pourdanesh, "Experiences With a Two-Terminal-Pair Digital Impedance Bridge," IEEE Trans. Instr. Meas., vol. 64, p. 1460-1465 (2015).

Perspective

Realization of the farad from the quantum Hall effect with a fully-digital bridge

Expected uncertainty:1..3 $\times 10^{-7}$