Deliverable 3.1.10:
Good Practice Guide addressing the issues of Generating trace level AMCs

EMRP
European Metrology Research Programme
Programme of EURAMET

The EMRP is jointly funded by the EMRP participating countries within EURAMET and the European Union

Document information

Owner

Lead Name:	B. Gieseking, P. J. Brewer
Lead Organisation:	National Physical Laboratory
E-mail:	bjoern.gieseking@npl.co.uk

Context

Author(s):	B. Gieseking (NPL), P. J. Brewer (NPL), S. Persijn (VSL), A. Demichelis (INRIM)
Work Package:	3
Task:	3.1
Deliverable Number	3.1.10
Deliverable Name	Good Practice Guide addressing the issues of generating trace level AMCs

CONTENTS

1 Introduction

Airborne molecular contaminants (AMCs) are chemicals in the form of vapours or aerosols within a manufacturing environment that have a detrimental effect on instruments, manufacturing processes and product performance. They are of particular relevance for the advanced semiconductor industry with ammonia (NH_3), hydrogen chloride (HCl) and hydrogen fluoride (HF) being identified as the most prominent contaminants. Due to the advanced miniaturisation in this particular field of industry relevant concentrations of AMCs are at trace amount levels (low nmol/mol to pmol/mol) making detection challenging. While recent progress in the field of cavity-enhanced optical detection methods allows for the detection of most AMCs at low nmol/mol levels the generation of reference standards required to calibrate these instruments is challenging. A main reason for this is the reactive and/or adsorptive nature of most of the target molecules affecting the stability of static reference standards and increasing the uncertainty associated with their preparation process – in particular for below µmol/mol level mixtures.

This report summarises good practice guidance for the generation of reference standards of AMCs at trace amount levels. It describes the two main approaches for generating low level dynamic reference standards and addresses the correct choice of materials and design of the facility and discusses issues that might arise.

2 Available Methods

As previously mentioned the preparation of low amount fraction static reference standards of AMCs by gravimetry is challenging. Even at low µmol/mol concentrations the uncertainties associated with the preparation process can be comparably high mainly due to the reactive nature of AMCs. Therefore - although being more complex to set up and more expensive - facilities for the generation of dynamic reference standards offer some advantages: Since a continuous flow of reference gas is generated losses due to adsorption become negligible once steady state conditions have been reached. In addition dynamic generators can cover a wide range which is beneficial for the calibration of detectors.

For the generation of dynamic trace amount fraction reference standards of AMCs two main approaches exist: One can either choose to dynamically dilute a static parent mixture for example at 10 µmol/mol or use permeation, diffusion or liquid injection devices. Facilities based on static parent standards are comparably simple and robust and can be used for many different types of target

molecules. In order to achieve low uncertainties it is crucial to measure and control the parent and diluent flows in an accurate and precise way. An example of a facility using the dynamic dilution of parent or reference mixture to validate an unknown gas mixture is shown in Figure 1. Here mass flow controllers (MFCs) and molblocs are used to control and measure flows, respectively (see also chapter 4).

In the case of AMCs where the expanded relative uncertainty in the amount fraction of the parent mixture can have a significant contribution to the final uncertainty extra care has to be taken when preparing and choosing the gas mixture to dilute from. In addition the stability of the mixture over time and also as a function of cylinder pressure has to be guaranteed.

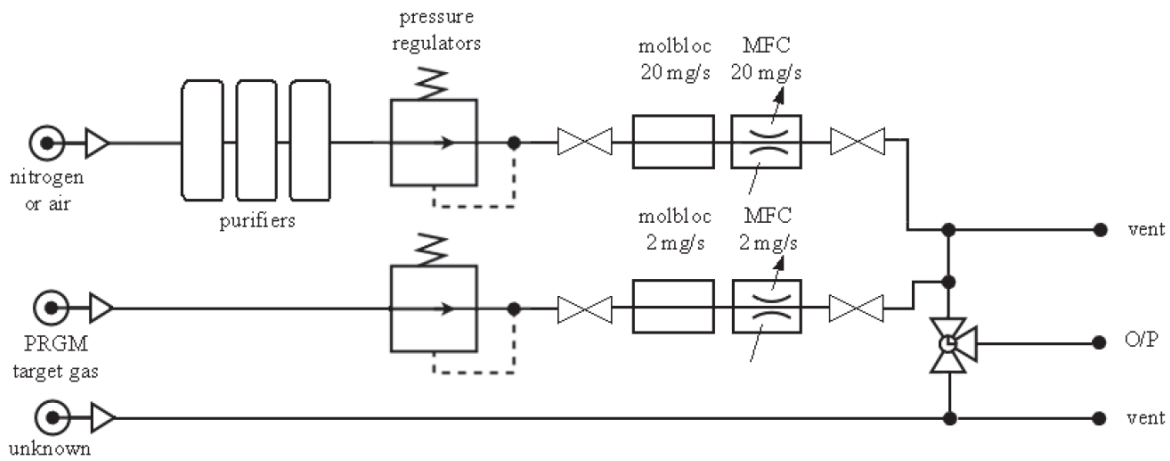

Figure 1: Schematic illustration of a high-accuracy facility for generating dynamic reference standards using a static reference mixture.

Facilities using permeation, diffusion or liquid injection devices yield comparable or even lower relative expanded uncertainties (≤ 2% achievable) than setups based on dilution of a parent mixture but are in general more complex. An example of a schematic diffusion cell/permeation tube setup is shown in Figure 2. Besides the precise control and measurement of flows they also require the precise control of the temperature of the permeation or diffusion device as well as the accurate determination of its mass loss. Often a diffusion or permeation facility can just be used for the generation of dynamic standards of one component. In case of a liquid injection system the evaporator unit has to be kept at a constant temperature to prevent concentration gradients.

When relative expanded uncertainties ≤ 2% are required the use of facilities based on diffusion, permeation or liquid injection is recommendable while for expanded uncertainties significantly higher than 2% the dilution of static parents is a good alternative. However, it has to be mentioned that with recent efforts put into the improvement of the stability of static standards and the reduction of the

associated uncertainty the dilution of static standards becomes more feasible for situations where low uncertainties are required. In this context it would of course be beneficial to decrease the minimum amount fractions of stable static standards that can be prepared gravimetrically.

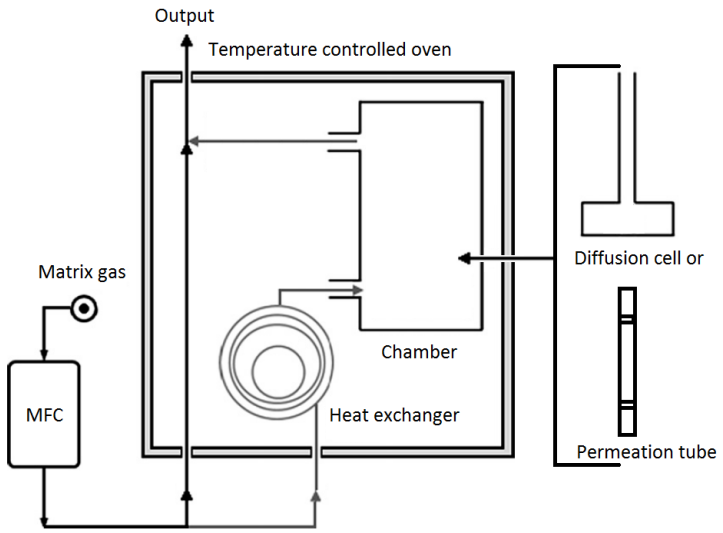

Figure 2: Example of a dynamic reference generator based on permeation or diffusion devise.

3 Choice of Materials

Issues with materials used with AMCs arise from the reactive and/or adsorptive nature of the molecules. In the case of HCl the presence of water can cause the corrosion of metals used for the setup. Therefore it is recommended to purge the facility with dry gas before and after exposing it to HCl. Materials that can be used comprise stainless and carbon steel, nickel, special alloys (e.g. Monel and Hastelloy) or fluorinated polymers (PFA, PTFA). For wet environments alloys such as Monel and Hastelloy or nickel can be used.

For adsorptive molecules such as NH_3 glass such as Pyrex and quartz or fluorinated polymers are good choices. If stainless steel is to be used the coating of all surfaces in contact with the molecular species - for example with Silconert 2000 - is recommended in order to minimise adsorption losses in the system.

For liquid injection facilities deactivated borosilicate tubing and mixers with Rotulex connections in combination with Schott GL sampling ports for the assembly of the dilution part of the generation unit are a good choices in terms of glassware while fluorinated polymers like FEP can be used for the flexible tubings.

A combination of deactivated borosilicate tubing with Schott GL connection can also be employed for generator cells and vials in fixed generator systems and calibrated transportable vials based on diffusion. Figure 3 shows a set portable glass diffusion vials for acetone and methanol that are realized for diffusion rates in the range of 0.25 to 25 µg/min. These vials can be used to generate AMC standard mixtures in different laboratories.

standard name	VOC	Nominal neck lenght [cm]	Nominal neck i.d. [mm]	nominal DR @ 25°C [ug/min]
IND63_L_Me	methanol	10	0,6	0,5
IND63_L_Ac	acetone	10	0,6	1
IND63_H_Me	methanol	10	2,2	10
IND63_H_Ac	acetone	10	2,2	20

Vial reservoir: 8 g

Figure 3: Glass diffusion vials for methanol and acetone (left) and their specifications (right).

Since the final concentration of the targeted molecular species is in the nmol/mol range the purity of all used chemicals becomes a significant factor. This applies for the pure components that are used to gravimetrically prepare static reference mixtures as well as for the chemicals used in permeation or diffusion devices. NH_3 and HCl are available from gas suppliers with sufficiently high purity grades and permeation tubes can be purchased from several different manufactures. For HF due to its highly reactive nature the generation of dynamics standards using permeation tubes is the most feasible approach. When using permeation devices the purity of the used chemicals should be enquired from the manufacturer in case not stated. For formaldehyde static and dynamic standards can be generated by applying an intermediate chemical conversion step. For this several different methods exists for example the thermal depolymerisation of trioxane.[1,] As a result not only the purity of the source materials but also the conversion yield of the reaction has to be monitored carefully.

Another aspect that has to be taken into account is the contamination of the diluent or matrix gas – for example nitrogen or air- with the target molecule or any other component that might cause a chemical reaction with the target molecules. The influence of the diluent gas can be minimised by using gas of the highest available purity and applying suitable filters if necessary.

4 Facility Design

In order to minimise the aforementioned adsorption losses it is advisable to keep the internal surface area of the whole setup as small as possible. This includes keeping the length of required tubing at a minimum and the overall design as simple and compact as possible. In addition the correct choice of materials and/or coatings for the application in mind is crucial and possible initial stabilisation times of the dynamic facility have to be studied carefully.

For all designs the precise control and measurement of flows are key factors to achieve low uncertainties. CMOS-based MFCs are a good choice when it comes to adjustable flow elements since they provide improved repeatability over conventional mass flow controllers. Since MFCs introduce a significant amount of surface area it is recommended to coat them in case they are in contact with adsorptive molecular species.

For the measurement of flows molblocs are the meter of choice as they provide the best specifications with respect to repeatability and reproducibility with a total measurement uncertainty of only 0.125%. Due to their comparably high price however molblocs can be replaced by other types of flowmeters such as the BIOS system.

Instead of MFCs fixed flow elements such as critical flow orifices could be used as inexpensive alternative. Critical flow orifices are based on an orifice plate that generates a supersonic gas flow if the supplied upstream pressure is at least twice the downstream pressure. They yield highly repeatable and reproducible flows and uncertainty contributions that stem from the control of flows can be avoided. By choosing orifices over a non-coated MFC one can also significantly reduce adsorption losses. With both systems – the ones based on adjustable flow elements and the ones based on fixed flow elements – flow control with a relative expanded uncertainty as low as 0.2% can be achieved. [2,3,4]

In order to achieve concentrations of AMCs in the low nmol/mol region a layout utilizing a two-step dilution process is recommended (see 4 a)). Applying this scheme resulting expanded relative uncertainties in the generated concentration can be a slow as 1 – 3% and the consumption of gas – in particular the diluent gas - is usually moderate (≤ 5 l/min). As an alternative to the aforementioned

approach a split-vent scheme can be used as indicated in Figure 4 b): By introducing a set of vents, for example after the permeation tube or diffusion cell oven, the generated amount fraction of the target molecular species can already be significantly reduced before the actual dilution process giving access to different amount fraction ranges depending on the setting of the vents (open/close). The generated amount fraction within this range is then defined by the chosen diluent gas flow.

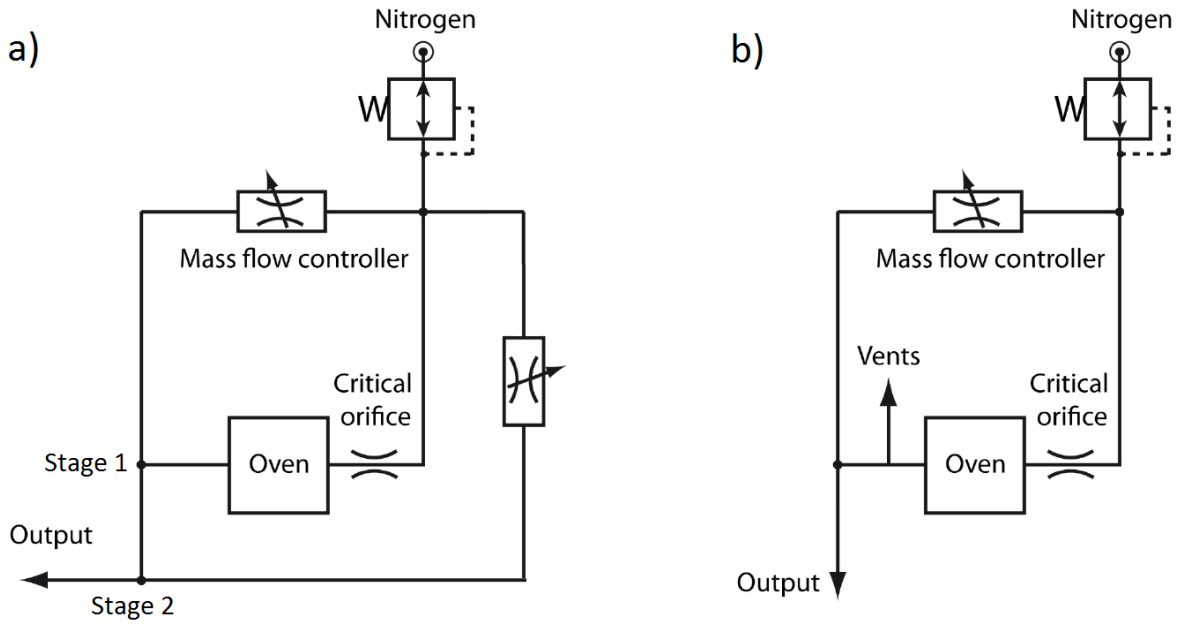

Figure 4: Design of a permeation or diffusion facility for generating dynamic trace amount reference standards applying a two-step dilution a) and split vent scheme b), respectively.

The working principle is based on continuous syringe injection as described in ISO standard 6145-4. In the first stage dilution step the mixture is led into an oven and evaporated into a flow of purified nitrogen. Once the gaseous mixture leaves the oven it is optionally again diluted with purified air/N_2, and optionally by purified air. The gas is mixed by Vigreux-shaped gas-mixers, before it reaches the sample ports. A small part of the first stage output flow is sucked through a low ΔP, high temperature mass flow controller (a venturi creates a constant vacuum pressure downstream). This flow is further diluted. The gas is mixed by Vigreux-shaped gas-mixers, before it reaches the sample ports. The gas has to be heated above condensation point of the semi-VOCs, depending on the concentration and the vapour pressure of the components. This especially holds for the parts of the generation system which contain the highest concentration of compounds. The working principle of this facility has been tested at elevated temperatures up to 85 °C. The system is suitable to reach the range of 10 ppb ~ 100 ppt for AMC's.

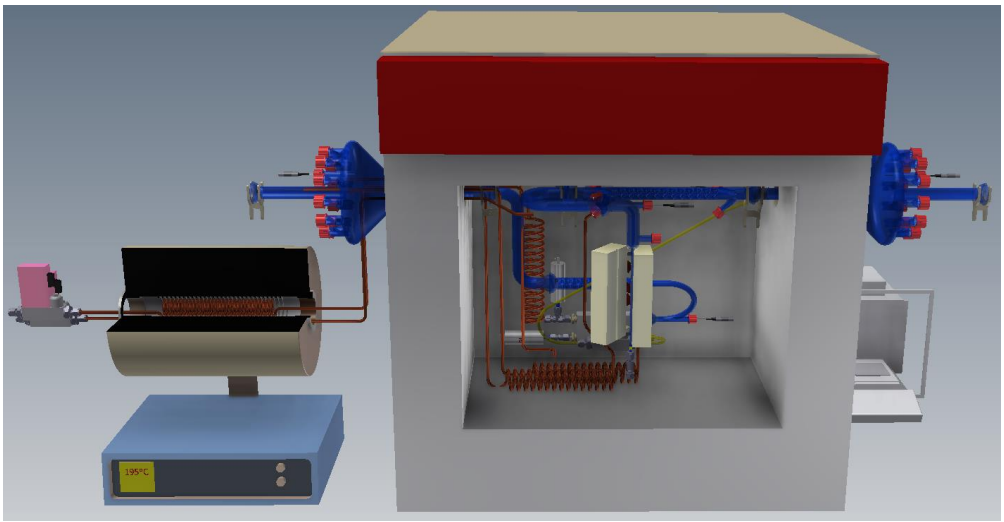

Figure 5: Two-stage generation/dilution system for semi-VOCs.

For facilities based on permeation or diffusion the precise determination of the mass loss of the used tube or cell device is detrimental: The uncertainty in the mass loss can account for up to 50% of the final uncertainty budget. A main reason for this is the fact that the tube or cell has to be removed from the oven for the weighing procedure and initially needs to equilibrate before the weighing can take place. This leads to a trade-off between keeping the total time of the device outside the oven as small as possible while at the same time allowing for a sufficiently long equilibration time. The best solution therefore is to use a high-precision balance that continuously monitors the mass loss during the course of the experiment for example a magnetic suspension balance. In case such a device is not readily available extra care has to be taken for developing an adequate weighting procedure for determining the mass loss.

In order to achieve a high degree of precision and accuracy of the permeation or diffusion facility it is important to guarantee for constant rates of permeation or diffusion over time. Therefore one has to make sure that good temperature control of ± 0.1°C or less is maintained. In this context it important to keep in mind that the diffusion or permeation device might require a significant time to equilibrate after switching on the oven unit. With commercially available permeation tube ovens a temperature control < 0.1°C is easily achievable, however, these devices usually only allow for the use of one permeation or diffusion source at a time. Figure 6 shows an example of a home-build facility that allows for the generation of dynamic standards of different AMCs. It consists of a termostatic bath in which 17 diffusion cells with the AMCs liquid compound are maintained. In these cells there are diffusion

vials which produce a stable calibrated compound diffusion rate, by flushing the cell with a small carrier flow. The realized flow is then diluted down to ppb – ppt level in the dilutor section with a pure air flow controlled by a calibrated sonic nozzle.

Figure 6: Stationary dynamic generator for trace ammount concentrations of AMCs.

For liquid injection facility it is most crucial that in the generation system there are no cold spots as there the VOCs will condense. Therefore the entire generation system has to be built inside an oven that keeps all components at 80 °C.

5 Analysers

Recent developments in the field of cavity-enhanced absorption spectroscopy – in particular cavity ring-down spectroscopy (CRDS) – paved the way for the measurement of low nmol/mol amount fractions of molecular species. Suitable CRDS systems for several different AMCs are commercially available – for example for NH_3, HCl and formaldehyde with lower detection limits in the sub nmol/mol to nmol/mol range. These devices are rather simple to use, robust in operation, compact and portable

and allow for real time monitoring. A major disadvantage is that one CRDS facility can only be used for one component of interest making the measurement of several AMCs quite expensive.

An alternative is the use of gas chromatography. This technique allows for the simultaneous detection of several different AMCs reducing the price of the equipment compared to CRDS facilities. Below µmol/mol detection limits are achievable, however the detection of low nmol/mol concentrations is challenging and requires additional work for optimising the applied method. In addition the use of gas chromatography does not allow for real time monitoring and the equipment is less portable.

References

[1] P.J. Brewer, E. A. di Meane, G. M. Vargha, R. J. C. Brown, M. J. T. Milton. Talanta, *108*:83-87, 2013.

[2] A. Demichelis, G. Sassi, M. P. Sassi. Accred. Qual. Assur., *18*:181-186, 2013.

[3] P.J. Brewer, B. A. Goody, T. Gillam, R. J. C. Brown, M. J. T. Milton. Meas. Sci. Technol., *21*:115902, 2010.

[4]. M. Hayakawa, Y. Ina, Y. Yokoi, M. Takamoto, S. Nakao. Flow Meas. Instrum., *11*:279-283, 2000.