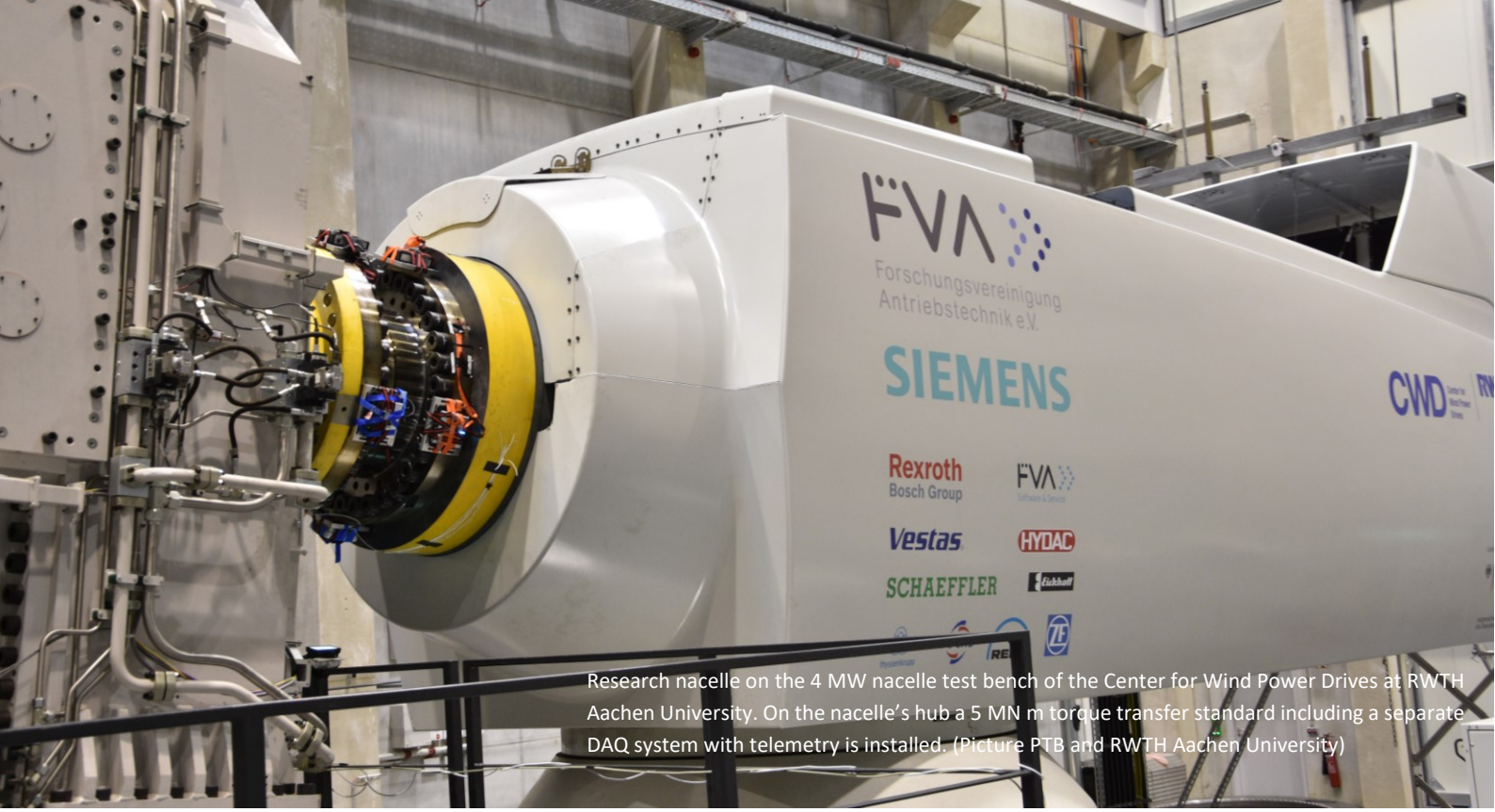

Research nacelle on the 4 MW nacelle test bench of the Center for Wind Power Drives at RWTH Aachen University. On the nacelle's hub a 5 MN m torque transfer standard including a separate DAQ system with telemetry is installed. (Picture PTB and RWTH Aachen University)

Preparations for First Test Campaigns

Newsletter No. 2 – November 2021

Welcome to the second edition of our newsletter for the project *WindEFCY*. The present newsletter gives a short summary of the transfer standards for mechanical and electrical power measurement and the upcoming planned measurement campaigns.

Project Progress

The first work package about *influencing variables and boundary conditions for the efficiency determination of wind turbines* is completed. The objective was to investigate the multitude of influencing variables and the changing boundary conditions for measurements to determine the efficiency of wind turbines both in the field and in test benches. Moreover, data transmission and synchronisation technologies were surveyed. The results are available in form a document (deliverable D1) on the project's website and will be used for all other technical work packages.

Mechanical Power Measurement

To calibrate the measurement of mechanical power input in nacelle test benches, a transfer standard for torque and rotational speed is required. The torque is measured by a customised torque transducer (Figure 1) manufactured by HBK with a measuring range of 5 MN m. It is calibrated up to 1.1 MN m. Above 1.1 MN m the transducer is metrologically characterised using an extrapolation method based on partial range calibration results.

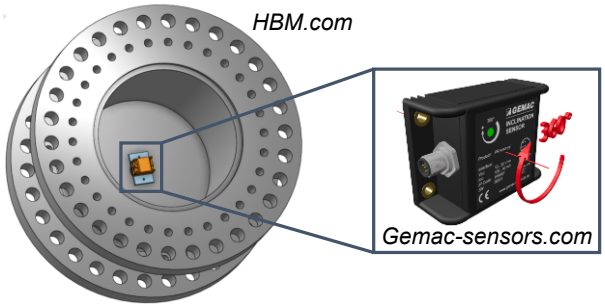

Figure 1 Transfer standard for mechanical power measurement.

The rotational speed is determined by measuring the rotational angle over a designated time span via a calibrated inclinometer. To increase the accuracy of the angle measurement, a second

inclinometer measures the tilt angle of the rotating axis and checks the misalignments of the first inclinometer. The inclinometer is installed inside the torque transducer to ensure both quantities are measured at the same location. Here, torque and rotational speed are averaged separately over an integer number of revolutions to reduce the measurement uncertainty of torque and rotational speed measurement. This method achieves a higher accuracy for the determination of mechanical power with negligible systematic effect.

Electrical Power Measurement

The measurement of electrical power in nacelle test benches is calibrated via transfer standards as well. To this end, a reference power measurement system is set up. It consists of a commercial power analyser (Figure 2 bottom), a high voltage divider (Figure 2 top left), and precision current transducers (Figure 2 top right). The precision wideband high voltage divider measures three phases up to 20 kV peak voltage at a frequency range from DC to 300 kHz with an amplitude error of 0.05 % (50 Hz) and a phase shift of 0.06° (50 Hz). The precision current sensors with built-in electronics measure up to 3 kA peak at a frequency range from DC to 300 kHz with an amplitude error of 0.01 % (50 Hz) and a phase shift of 0.04° (50 Hz). The data of the voltage and current sensors are gathered synchronously by the power analyser.

Figure 2 Transfer standard for electrical power measurement.

Test Campaigns

In two major test campaigns, mechanical and electrical power measurement in nacelle test benches is traced to national standards and a newly developed method to determine the efficiency of devices under test (DUTs) on test benches is investigated. The test campaigns take place at the Dynamic Nacelle Testing Laboratory (DyNaLab) of Fraunhofer IWES in Bremerhaven, Germany, and at the Center for Wind Power Drives (CWD) of RWTH Aachen University in Aachen, Germany. Prior to measuring campaigns, the newly developed efficiency determination method is tested on a small-scale motor test bench at PTB.

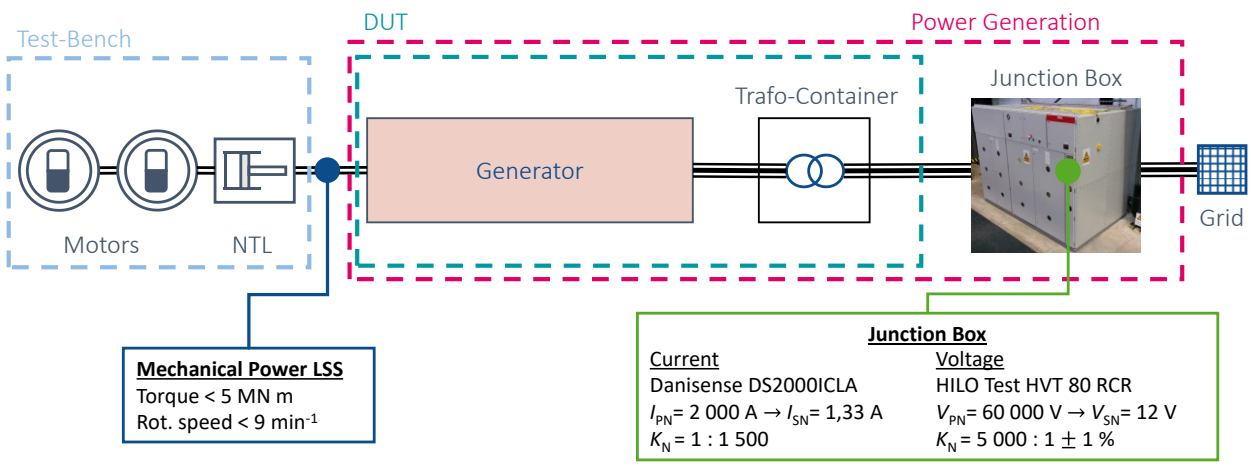

Figure 3 Measuring set-up at 10 MW DyNaLab of Fraunhofer IWES.

10 MW Nacelle Test Bench

The measurement campaign at the 10 MW DyNaLab of Fraunhofer IWES will be in December 2021. For calibrating torque and rotational speed measurement in the test bench, the transfer standard for mechanical power measurement is installed between the non-torque load unit (NTL) of the test bench and the DUT (Figure 3). The data acquisition system (DAQ) of the transfer standard for mechanical power measurement is synchronised to the DAQ of the test bench. To calibrate the electrical power measurement in the test bench, the reference power measurement system measures current and voltage in the test bench's junction box (Figure 3). For the efficiency determination measurements, the electrical power is also measured on the secondary side of the power transformer by a second reference power measurement system. For both the calibration of the test bench and the efficiency determination of the DUT, so-called characterisation maps will be performed.

Small-Scale Motor Test Bench

At PTB, a small-scale 200 kW motor test bench with two different torque transducers and a test rotating electrical machine (Figure 4) is used to explore the direct and the indirect efficiency determination method along with the alternative back-to-back efficiency determination method that improves the existing method with new suggestions. A four-pole rotating electrical machine, which is an asynchronous machine, is used as the DUT at a 50 Hz operating frequency and at a rated speed with varying load conditions. The entire efficiency determination process for rotating electrical machines, including thermal stability measurements, is monitored and controlled by a real-time control test system. During the test, the surface temperature of the DUT is measured continuously and the DUT is run continuously until thermal stability is obtained. Thereby, this thermal stability is achieved once the rate of temperature change is ≤ 1 K per half hour at the hottest point. The surface temperature is measured by a temperature recorder (Yokogawa MV2000). All electrical quantities, such as voltage U, current I, and power factor $\lambda = \cos\varphi$ are displayed on the power analyser (Yokogawa WT 5000) and read on a computer as electrical power P_{el}. Similarly, the mechanical quantities torque M and speed n are measured using two torque sensors (HBK T10F and HBK T12HP) with encoders. Based on these measurements, the mechanical power P_{mech} is calculated.

Additionally, to analyse the effect of the rotational speed on the torque signal, two torque transducers including encoders were connected in series and

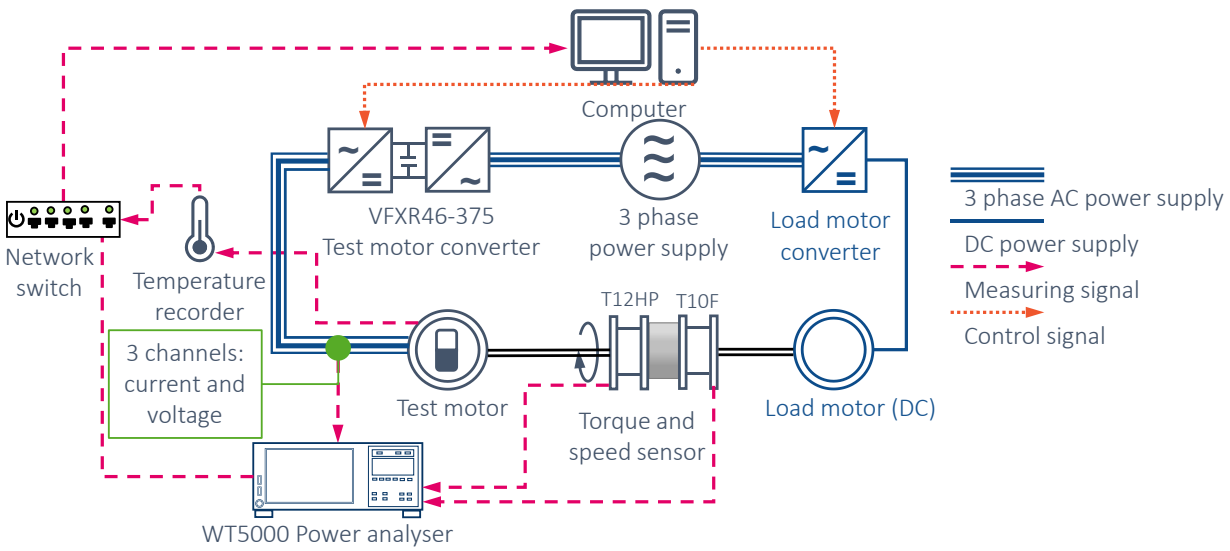

Figure 4 Schematic overview of the small-scale motor test bench at PTB.

calibrated together. In doing so the moment of inertia of the transducer farther afar of the DUT and the adapter between the two transducers can be determined.

Recent Publications

All deliverables and publications are available on the project website: www.ptb.de/empir2020/windefcy/information-communication/publications/.

C. Mester, "Sampling primary power standard from DC up to 9 kHz using commercial off-the-shelf components" in energies 2021, 14, 2203. https://doi.org/10.3390/en14082203

Z. Song *et al.*, "10 MW mechanical power transfer standard for nacelle test benches using a torque transducer and an inclinometer" in Measurement: Sensors, Volume 18, 2021, 100249, https://doi.org/10.1016/j.measen.2021.100249.

P. Weidinger *et al.*, "Need for a traceable efficiency determination method of nacelles performed on test benches" in Measurement: Sensors, Volume 18, 2021, 100159, https://doi.org/10.1016/j.measen.2021.100159.

Involvement in the Project

You are interested in our project, want to stay informed and get first-hand information and training on traceable efficiency determination of wind turbines and their components on nacelle test benches? Become part of the project's Stakeholder Committee without financial or any other obligations. The main matter of the Stakeholder Committee is to keep the project focused on industry and test bench operator needs. Just drop us a message via the project website.

How to contact us

Project coordination:
Dr. Rolf Kumme (windefcy@ptb.de)
Physikalisch-Technische Bundesanstalt

Project website:
www.ptb.de/empir2020/windefcy/home/

The Consortium

Acknowledgements

The project 19ENG08 – WindEFCY has received funding from the EMPIR programme co-financed by the Participating States from the European Union's Horizon 2020 research and innovation programme.

The EMPIR initiative is co-funded by the European Union's Horizon 2020 research and innovation programme and the EMPIR Participating States

Editor: Paula Weidinger