EMPIR
The EMPIR initiative is co-funded by the European Union's Horizon 2020 research and innovation programme and the EMPIR Participating States
EURAMET

The **GIQS Newsletter**, no. 2, Dec 2020

GIQS Graphene Impedance Quantum Standard

The EMPIR Project 18SIB07 GIQS:
Graphene Impedance Quantum Standard

Establishing SI linked quantum traceability by exploiting the potential of graphene

The project

The aim of GIQS is to enable an economically efficient traceability of impedance (resistance, capacitance, inductance) measurements to the defining constants (the Planck constant and the elementary charge) of the International System of Units (SI). New and easier to operate measurement bridges, convenient and easier to use graphene quantum standards, cryogenic systems, and methods to combine them will be developed. The project is now in the middle of its development, and several progresses have been made towards its goals.

Progresses

Graphene devices, including arrays, now reach quantisation at 4.2 K and low magnetic field (< 5 T)

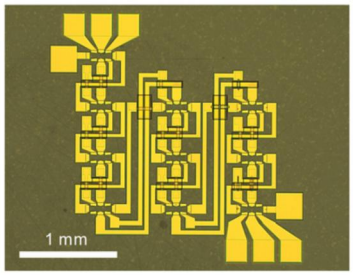

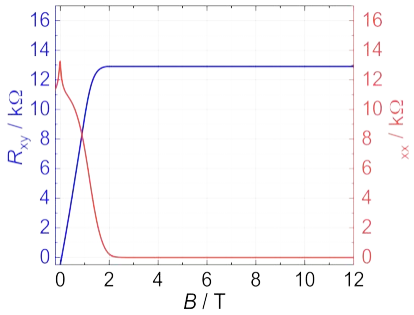

Cryogenic sample holders and environments, suitable for ac measurements, are under development

Coaxial cryoprobe for small-size 6 T magnet

Shielded TO8 holder

Latest events:

- GIQS M18 **open** virtual stakeholder session, Nov 2020
- EURAMET Technical Committee for Electricity and Magnetism (TC-EM), Oct 2020 (online)

Electricity and Magnetism

- GIQS paper presented at IMEKO TC-4

IMEKO TC-4 Palermo 2020

- GIQS papers presented at the Conference on Precision Electromagnetic Measurements, Aug 2020 (online)

DENVER, COLORADO NCSL INTERNATIONAL CPEM 2020

The project stakeholders include metrology organisations, research centers, calibration laboratories, industries which are interested in the project outcome and give input to maximise its impact on the T&M community.

Want to join? Contact us!

EMPIR
The EMPIR initiative is co-funded by the European Union's Horizon 2020 research and innovation programme and the EMPIR Participating States
EURAMET

A transportation chamber
for graphene devices
allowed a round-robin comparison between two partners 10000 km far away. The measurements agree to parts per billion

Digital bridges, either based on Josephson or electronic sources, have been realized and are under extensive testing

Reconfigurable electronic digitally-assisted / fully-digital bridge

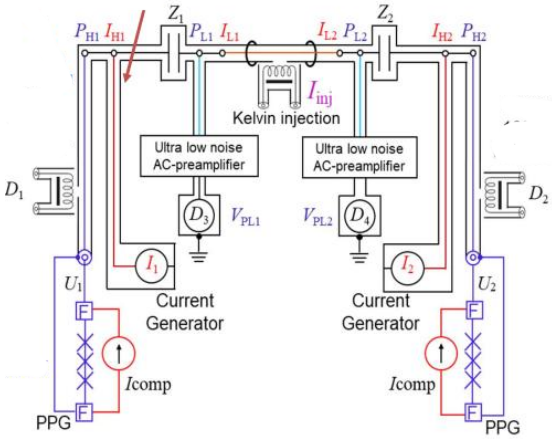

Josephson impedance bridge

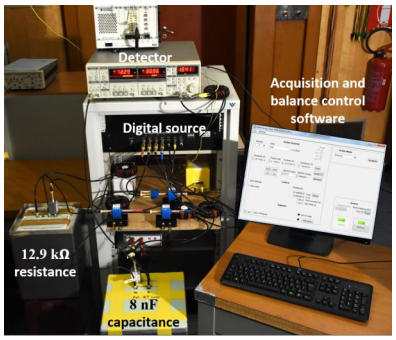

Fully-digital quad bridge for *R-C* comparisons

New papers on international reviews

J. Park, W.-S. Kim, D.-H. Chae, "Realization of $5h/e^2$ with graphene quantum Hall resistance array", Appl. Phys. Lett. 116, 093102 (2020)

D. Momeni Pakdehi, P. Schädlich, T. T. Nhung Nguyen, A. A. Zakharov, S. Wundrack, E. Najafidehaghani, F. Speck, K. Pierz, T. Seyller, C. Tegenkamp, and H. W. Schumacher, "Silicon carbide stacking order induced doping variation in epitaxial graphene", Adv. Funct. Mater. 2020, 30, 2004695.

M. Marzano, M. Ortolano, V. D'Elia, A. Müller, L. Callegaro, "A fully-digital bridge towards the realization of the farad from the quantum Hall effect," Metrologia 58 015002

S. Bauer, R. Behr, R. E. Elmquist, M. Goetz, J. Herick, O. Kieler, M. Kruskopf, J. Lee, L. Palafox, JY Pimsut, "A four-terminal-pair Josephson impedance bridge combined with a graphene quantized Hall resistance", Meas. Sci. Technol., accepted manuscript online

The partners

INRiM Istituto Nazionale di Ricerca Metrologica
Czech Metrology Institute
PTB
Laboratoire National de Métrologie et d'Essais LNE
METAS
RISE
C2N
NIMT
CRHEA
Politecnico di Torino
VTT Mikes Metrology
KRISS Korea Research Institute of Standards and Science

This project has received funding from the EMPIR programme co-financed by the Participating States and from the European Union's Horizon 2020 research and innovation programme.

Digital impedance bridges

The quantum Hall effect gives a realisation of the resistance unit, the ohm, in both the dc and the ac regimes. The realisation of the henry and farad, and of impedance scales, requires accurate bridges to perform comparisons of impedances having different phase angles.

Traditional transformer bridges can perform these comparisons with very high accuracy, but are complex networks of electromagnetic devices, difficult to manufacture and calibrate, and must be manually operated by skilled technicians.

In digital bridges, digital-to-analog converters (DAC) take the role of ratio transformers. The resulting network is simpler to construct and operate under computer control.

Josephson array waveform synthesizers, being DAC of quantum accuracy, allow flexible bridges reaching the best uncertainties, now in the 10^{-8} range. Electronic DACs, less accurate but cheaper and more user-friendly, permit to reach uncertainties in the 10^{-7} range for specific measurement configurations.

The GIQS project has now its YouTube channel (click) youtube.com/channel/UCaHuyb8YzrjPnLUz7nSiauA

YouTube