Word-Synchronous Optical Sampling of Periodically Repeated OTDM Data Words for True Waveform Visualization

Erik Benkler and Harald R. Telle

***Abstract*—An improved phase-locked loop (PLL) for versatile synchronization of a sampling pulse train to an optical data stream is presented. It enables optical sampling of the true waveform of repetitive high bit-rate optical time division multiplexed (OTDM) data words such as pseudorandom bit sequences. Visualization of the true waveform can reveal details, which cause systematic bit errors. Such errors cannot be inferred from eye diagrams and require word-synchronous sampling. The programmable direct-digital-synthesis circuit used in our novel PLL approach allows flexible adaption of virtually any problem-specific synchronization scenario, including those required for waveform sampling, for jitter measurements by slope detection, and for classical eye-diagrams. Phase comparison of the PLL is performed at 10-GHz OTDM base clock rate, leading to a residual synchronization jitter of less than 70 fs.**

***Index Terms*—Direct digital synthesis (DDS), optical sampling, optical time division multiplexing (OTDM), pseudorandom bit sequences (PRBS).**

I. Introduction

EYE DIAGRAMS generated by optical sampling are the most prominent representative of the few tools available for characterization of optical time division multiplexed (OTDM) data streams. OTDM denotes the nesting of several data streams at a base clock rate near 10 GHz in order to achieve a data stream at very high bit rates of up to 640 Gb/s in a single wavelength channel and single polarization state [1]. Eye diagrams of pseudorandom bit sequences (PRBSs) contain statistical information on the transmission quality, from which certain parameters, such as timing jitter, amplitude fluctuations, or bit-error rate can be estimated. A drawback of eye diagrams is that they cannot provide isolated information on the waveform of a specific bit or its surroundings, since they comprise superimposed waveforms of numerous different bits in the data stream. However, this individual information would be extremely helpful, e.g., in identifying the cause of systematic bit errors. Such a systematic bit error may, for example, result from a resonance excited in the transmission system by the bit sequence "01010100," leading to an erroneous substitution of the "0" bit at the end of this sequence by a "1." Such a resonance can only be identified as the cause of the bit error if the isolated waveform of this sequence is visualized instead of an eye diagram.

In this paper, we present a novel synchronization scheme for optical sampling, which enables the measurement of the bit sequential waveform instead of an eye diagram. The scheme can be applied to any data signal consisting of periodically repeated data words. PRBS signals widely used in bit-error-rate measurements constitute a practically important class of such repetitive signals. Recently, software-synchronization by postprocessing has been demonstrated to fulfill a similar task. However, this software approach is limited by processor speed: currently to several hertz for bit-rate-agile synchronization [2].

Optical sampling is an equivalent-time sampling technique based on all-optical cross correlation between the signal under test and a train of short sampling pulses with a repetition rate lower than the bit rate, allowing conveniently slow data acquisition. Either nonlinear sampling based on, e.g., sum frequency generation in nonlinear crystals [3], nonlinear interactions in fibers [4] or in semiconductor optical amplifiers [5], or linear sampling, i.e., determination of the interference contrast [6], [7] can be employed to implement the all-optical cross correlation. Linear sampling is more sensitive than nonlinear sampling and allows characterization of both amplitude and phase of an optical signal [8]. However, in contrast to nonlinear sampling, it requires bandwidth-limited sampling pulses which spectrally overlap with the signal under test. A review of the different optical sampling approaches can be found in [9].

II. Synchronization Scheme

The key idea of waveform sampling is that the sampling pulses are synchronized to the periodically repeated data words, i.e., that the sampling rate is a subharmonic of the word rate. In this condition, each sampling pulse samples the same bit in the data word at the same point of equivalent time. An infeed in equivalent time for sweeping over the waveform can then be added by a slight detuning from the exact synchronization condition or by an optical delay in either the data or sampling path. The condition for word-synchronous sampling is diagrammed by the dashed arrow path in Fig. 1(a). The word rate f_{w} is given by the bit rate f_{bit} divided by the word length L. Synchronization of the sampling pulses with the data words then requires

$$f_{\mathrm{s}} = \frac{f_{\mathrm{w}}}{K} = \frac{f_{\mathrm{bit}}}{KL}, \qquad K \in \mathbb{N}. \tag{1}$$

Manuscript received November 23, 2006; revised February 13, 2007.

The authors are with the Physikalisch-Technische Bundesanstalt, 38116 Braunschweig, Germany (e-mail: Erik.Benkler@ptb.de).

Color versions of one or more of the figures in this paper are available online at http://ieeexplore.ieee.org.

Digital Object Identifier 10.1109/JLT.2007.896800

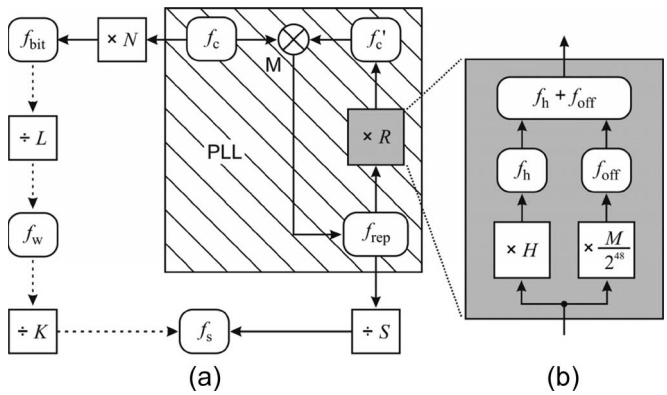

Fig. 1. (a) Block diagram showing the frequencies and their relations (dashed arrows) required and (solid arrows) actually used for word-synchronous sampling. (b) Detailed block diagram describing the implementation of the multiplication by the noninteger number R [gray-shaded box in (a)]. $f_{\rm bit}$: Bit rate. $f_{\rm w}$: Word rate. $f_{\rm s}$: Sampling rate. $f_{\rm c}$: OTDM base clock rate. $f_{\rm c}'$: Locked clock rate. $f_{\rm rep}$: Sampling laser repetition rate. $f_{\rm h}$: Hth harmonic of $f_{\rm rep}$. $f_{\rm off}$: Offset frequency generated from $f_{\rm rep}$.

For optical sampling normally used with PRBS signals, bit and sampling rates have a ratio far from this condition, which ultimately leads to scrambling of the information about multiple bits in an eye diagram.

The second path in Fig. 1(a) (solid arrows) takes into account several constraints imposed in an experimental implementation. In principle, the proper synchronization between sampling pulses and data stream is attained with a phase-locked loop (PLL) controlling the repetition rate of a mode-locked sampling laser. Two conflictive criteria determine the choice of the optimal frequency at which phase comparison in the PLL should be performed. On one hand, high frequencies with steep phase slopes are required to achieve minimum residual errors of the PLL and, hence, low system jitter. This suggests phase comparison at the bit rate $f_{\rm bit}$, which, on the other hand, is too high for convenient electronic processing. However, in OTDM systems, a 10-GHz base clock rate $f_{\rm c}$ is always available, either directly or using clock recovery schemes [10]. A good compromise is thus to perform the phase comparison at the 10-GHz base clock rate. As shown in Fig. 1(a), the OTDM bit rate $f_{\rm bit}$ is a multiple N of the base clock rate $f_{\rm c}$, where N can be expressed as a power of two in most cases.

The PLL is highlighted as a hatched box in Fig. 1. Phase comparison between the signals at frequencies $f_{\rm c}$ and $f_{\rm c}'$ is performed using mixer M. In combination with a low-pass filter at its output (not shown in Fig. 1), it generates an error signal which is at first order proportional to the phase difference between the two input signals. This error signal controls the repetition rate $f_{\rm rep}$ of the sampling laser, which in turn, by multiplication with factor R, results in the input frequency $f_{\rm c}'$, thus closing the PLL. In the phase-locked state, this implies

$$Rf_{\rm rep} = f_{\rm c}' = f_{\rm c} = \frac{f_{\rm bit}}{N}. \tag{2}$$

Comparison with (1) shows that, in principle, choosing $R = LK/N$ and $f_{\rm s} = f_{\rm rep}$ would lead to the desired word-synchronous sampling. However, this is not a flexible approach and requires a particular repetition rate of the sampling laser. Usually, the repetition rate of mode-locked erbium:fiber lasers suitable for optical sampling at telecom wavelengths is in the range of several tens of megahertz with a tuning range of a few percent or less, which does in general not suffice to fulfill the required condition. For this reason, the repetition rate of the sampling laser is reduced by an integer factor S with a pulse picker, finally resulting in the sampling frequency

$$f_{\rm s} = \frac{f_{\rm rep}}{S} = \frac{f_{\rm bit}}{SRN} \tag{3}$$

where (2) has been used in the second step. Comparison with (1) yields the condition for word-synchronous sampling

$$R = \frac{LK}{SN}. \tag{4}$$

In the general case, the factor R is a rational instead of an integer number. Such a multiplication with a rational factor $R \gg 1$ can be written as the multiplication with the sum of the integer part $H = \mathrm{trunc}(R)$ and the noninteger part $D = R - H < 1$. In our experimental implementation [see Fig. 1(b)], the multiplication of $f_{\rm rep}$ with the integer number H (on the order of 10 to 1000) generating the frequency $f_{\rm h}$ is readily available as the Hth harmonic of $f_{\rm rep}$. It is part of the Fourier series of the mode-locked laser output as detected with a fast photodiode. The rational factor $D < 1$ can be implemented using a direct-digital synthesis (DDS) circuit. A DDS circuit converts an input signal with frequency $f_{\rm in}$ into an output signal with a frequency $f_{\rm out} = M/2^B f_{\rm in}$ determined by a long (B bits) digital tuning word M. DDS chips with input frequencies of several hundred megahertz and high resolution of $B = 48$ bit are commercially available and, thus, allow the approximation of $D < 1$ without or with only negligible error (for more details on DDS technology, see, e.g., [11] and [12]). In our application, the frequency-agile multiplication of the repetition rate $f_{\rm rep}$ with the factor $D = M/2^{48}$ by means of a 48-bit DDS circuit yields the required offset frequency $f_{\rm off}$. Hence, the scheme tolerates fluctuations of the data rate since the DDS clock given by $f_{\rm rep}$ is phase-synchronously derived from the data clock. Finally, the sum frequency signal between the signals at $f_{\rm h}$ and $f_{\rm off}$ constitutes the required signal at $f_{\rm c}'$

$$f_{\rm c}' = Rf_{\rm rep} = f_{\rm h} + f_{\rm off} = \left(H + \frac{M}{2^{48}}\right) f_{\rm rep}. \tag{5}$$

This DDS approach is advantageous because, as mentioned earlier, a slight detuning from the exact word-synchronous sampling condition is required for sweeping, i.e., to obtain a small infeed in equivalent time between consecutive samples. Such a detuning can now be easily and flexibly introduced by reprogramming the tuning word M of the DDS chip.

In the presence of an equivalent-time infeed ΔT between two consecutive samples, the sampling interval $T_{\rm s}$ is

$$T_{\rm s} = \frac{1}{f_{\rm s}} = KLT_{\rm bit} + \Delta T \tag{6}$$

resulting in an equation similar to (1) for the required sampling frequency

$$f_{\mathrm{s}} = \frac{f_{\mathrm{bit}}}{KL + \Delta T/T_{\mathrm{bit}}}. \tag{7}$$

On the other hand, in the experimental implementation, the sampling frequency is

$$f_{\mathrm{s}}^{\mathrm{exp}} = \frac{f_{\mathrm{bit}}}{SN\,(H + M/2^{48})}. \tag{8}$$

Demanding that the required sampling rate (7) is experimentally implemented, (8) results in the condition

$$R = H + M/2^{48} = \frac{KL + \Delta T/T_{\mathrm{bit}}}{SN}$$
$$\text{with} \quad H = \mathrm{trunc}(R),\ M = 2^{48}(R - H). \tag{9}$$

The DDS tuning word M for a desired infeed ΔT can be calculated using (9). It is noteworthy that M is an exact integer if the numbers SN and $SNT_{\mathrm{bit}}/\Delta T$ can be expressed as powers of two with exponents ≤ 48. In this case, the offset frequency is not an approximation but exactly implemented using the DDS circuit. In our experiment, $S = 256$, and $N = 4$. Furthermore, the infeed ΔT can be chosen to be a power of two fraction of the length of a time slot T_{bit}.

If in the general case M is not an integer number, the maximum timing error due to the approximation of M by a 48-b DDS tuning word can be estimated as follows: The maximum error of the offset frequency f_{off} due to the approximation with a 48-b tuning word is

$$\Delta f_{\mathrm{off}} = \frac{f_{\mathrm{rep}}}{2^{48}}. \tag{10}$$

Since the phase comparison in the PLL is performed at f_{c}', a frequency error $\Delta f_{\mathrm{c}}'$ given by Δf_{off} results in a phase error $\Delta\varphi$

$$\frac{\Delta\varphi}{2\pi} \approx \frac{\Delta f_{\mathrm{c}}'}{f_{\mathrm{c}}'}. \tag{11}$$

This phase error produces an equivalent-time error $\Delta\tau$ per real time interval Δt_{real}

$$\frac{\Delta\tau}{\Delta t_{\mathrm{real}}} = \frac{\Delta\varphi}{2\pi} \approx \frac{f_{\mathrm{rep}}}{2^{48}}. \tag{12}$$

For the repetition rate $f_{\mathrm{rep}} = 56$ MHz used in our experimental implementation, a negligible synchronization drift of less than 1-fs equivalent time during 50-s real time results. Besides this potential error due to 48-bit DDS resolution, unwanted spurs and harmonics can result from the DDS principle [11]. In our setup, spurs are filtered out to a large extent using a bandpass filter behind the DDS circuit, which is necessary to maintain very low synchronization jitter.

III. Experimental Setup

The experimental setup is shown in Fig. 2. A passively mode-locked Er:Yb:glass laser (GigaTera ERGO PGL 10) [13]

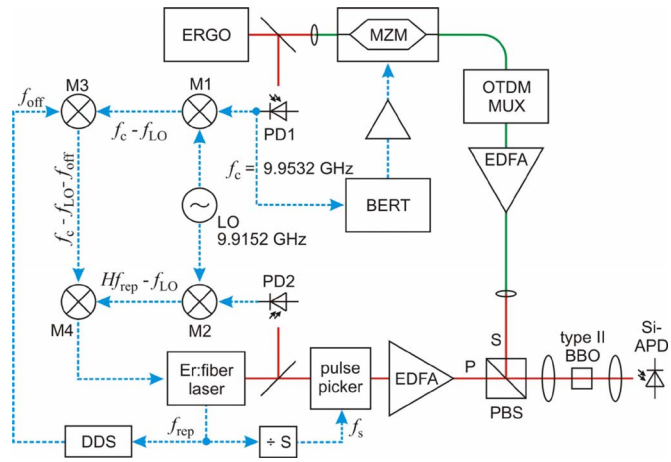

Fig. 2. Experimental setup. Red solid lines: Free-space optics. Green solid lines: Fiber optics. Blue dashed arrows: Electrical signals. ERGO: 10-GHz picosecond pulse source. BERT: Variable bit rate pattern generator. MZM: 10-GHz Mach–Zehnder modulator. MUX: Multiplexer. EDFA: Erbium-doped fiber amplifier. S, P: Vertical and horizontal polarization. PBS: Polarization beam splitter. BBO: β-barium-borate crystal. APD: Avalanche photodiode. M: Mixers. LO: Local oscillator. DDS: Direct-digital-synthesis board.

producing a pulse train of 1.8 ps [full-width at half-maximum (FWHM)] long pulses at a repetition rate near 10 GHz and at a wavelength of 1534.2 nm is used as source for a return-to-zero (RZ) OTDM data stream. A small part (4%) of the pulse train is sent to fast InGaAs photodiode PD1, detecting the OTDM base clock rate at $f_{\mathrm{c}} = 9.95328$ GHz. The remaining part of the pulse train is amplitude-modulated using an $LiNbO_3$ Mach–Zehnder modulator (MZM) driven by an electrical non-RZ (NRZ) PRBS signal. The electrical PRBS signal is generated by a pattern generator BERT synchronized to the base clock rate f_{c} (SHF 12100A as a part of SHF 10000 series modular bit-error-rate test system).

The resulting 10-GHz RZ-PRBS optical signal is then time-division-multiplexed. The multiplexer has been constructed to be PRBS-maintaining for $2^7 - 1$-bit long PRBS signals. This is based on the fact that interleaving two copies of a PRBS input signal delayed by half the word length results in a PRBS signal with the same pattern but at a double bit rate. In the experiment, we employed two cascaded free-space interferometers with adequate arm lengths to arrive at a PRBS-maintained 40-GHz output signal for word lengths of up to 127 bit.

The output of the multiplexer is amplified in an erbium-doped fiber amplifier (EDFA). Then, its polarization state is set to linear s-polarization using a polarization controller (not shown in Fig. 2). The data stream is combined with the p-polarized sampling pulse train using a polarizing beam combiner (PBS).

The sampling laser is a mode-locked Er:fiber laser producing $<$ 85-fs short pulses at $f_{\mathrm{rep}} = 56$ MHz and $\lambda = 1560$ nm. Its repetition rate can be modified by about $\pm 1\%$ with a piezo- and translation stage mounted mirror in a free-space section of the laser [14]. Part of the sampling laser output (4%) is used for the detection of the Hth harmonic of f_{rep} near f_{c} using fast InGaAs photodiode PD2. A 10-GHz MZM acts as pulse picker reducing the repetition rate by the factor $S = 256$ to the sampling rate f_{s} near 220 kHz. Pulse picking has three advantages: First,

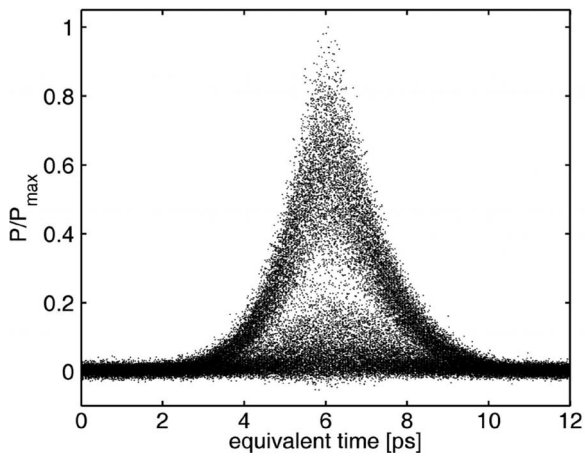

Fig. 3. A 40-Gb/s eye diagram of a low-quality 2^7-1-bit PRBS data stream. This eye diagram consists of approximately 65 000 sampled data points and scrambles the information about the 127 bit of the PRBS word. The cross-correlational power P is normalized to its maximum value.

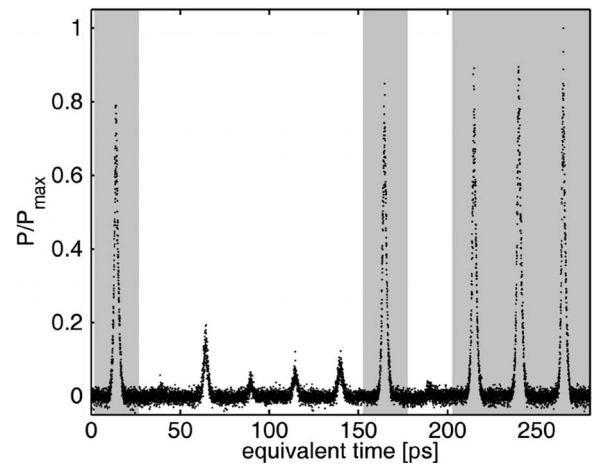

Fig. 4. Optically sampled waveform of the sequence of 11 bit out of the same PRBS data stream as the one resulting in the eye diagram shown in Fig. 3. The time slots of "1" bit of the driving electrical PRBS signal are gray shaded; the time slots of "0" bit are white.

the required range for the control of the repetition rate $f_{\rm rep}$ that is necessary to fulfill the synchronization condition under all circumstances is now below 1% and can thus be realized experimentally with our fiber laser. Second, the pulse energy of picked sampling pulses amplified by an EDFA is higher than without the picker, and third, data acquisition at 200 kHz is less demanding than at 56 MHz. The EDFA amplifying the sampling pulses is dispersion compensated. This results in sub-100-fs sampling pulses, which limits the ultimate timing resolution of our optical waveform sampling oscilloscope.

Type-II sum frequency generation in a 5-mm β-barium-borate (BBO) crystal is employed as a nonlinear sampling gate. Type-II phase matching efficiently yields a correlation signal only for orthogonal input polarizations. Hence, second harmonic background light (generated from signals with single polarization parallel to the crystal axes), which has a similar spectrum as the sum frequency signal, is sufficiently suppressed. The sum frequency signal is detected with a silicon avalanche photodiode (Si-APD) and recorded with a digitizer card clocked by $f_{\rm s}$.

The implementation of the word-synchronous sampling discussed previously includes in our actual setup a downconversion of the two 10-GHz signals detected with PD1 and PD2 to intermediate frequencies (IFs). An IF in the megahertz range was obtained using a 9.91528-GHz local oscillator (LO) and mixers M1 and M2. This superheterodyne scheme allows noise reduction by narrow bandpass filtering (not shown in Fig. 2) in the IF regime. Furthermore, any phase noise of the auxiliary LO is cancelled via a common mode rejection of the final mixer M4.

The offset frequency $f_{\rm off}$ derived from $f_{\rm rep}$ using a 48-bit DDS circuit (AD9852) is subtracted from the IF in the clock-rate detection path using mixer M3. This is equivalent to adding $f_{\rm off}$ to the IF in the repetition-rate detection path, as originally discussed in Fig. 1. Finally, mixer M4 generates the error signal, which, after low-pass filtering, controls the resonator length and, thus, the repetition rate of the sampling laser (first-order PLL characteristics).

Several noise processes like AM–PM conversion in the photodiodes PD1 and PD2 [15], DDS jitter (phase noise and spurs), unwanted mixing processes in the double-balanced mixers, as well as nonzero mixer offsets and offset drifts, 50-Hz mains interference, and other noise sources in the synchronization electronics manifest as phase noise of the control signal for the laser repetition rate. The phase noise within the control bandwidth causes a (relatively small) residual timing jitter between the 40-GHz data stream and the synchronized sampling pulses. Care has been taken to minimize these noise contributions. However, further reduction could yield an even tighter synchronization.

In our experiments at 40-Gb/s bit rate, the factor $K = 1428$ was chosen, resulting in the sampling rate $f_{\rm s} = 219.53$ kHz and the laser repetition rate $f_{\rm rep} = 56.2$ MHz. The employed DDS evaluation board allows programming of the tuning word via a parallel interface of a computer. The ultimate programming rate of the tuning word is limited by the DDS IO buffer and can be as high as several tens of megahertz, allowing flexible software setting of the tuning word.

IV. Experimental Results

For an exemplary demonstration of the new possibilities opened up by our versatile word-synchronous optical waveform sampling scheme, we employ it to analyze a $2^7 - 1$-bit PRBS data stream at 40-Gb/s OTDM bit rate. The tightness of the synchronization and the time resolution of the optical sampler are ample enough to allow an application to OTDM bit rates of 640 Gb/s or even more. However, stable operation of the free-space multiplexer with additional stages was not possible, impeding an explicit demonstration at bit rates higher than 40 Gb/s in this first proof of principle.

To simulate a realistic situation such as the analysis of a low-quality data signal producing systematic bit errors, we generated the data signal with an MZM (in Fig. 2) operated under nonoptimum conditions, i.e., reflections from imperfect terminators.

An eye diagram of the data signal as it would be observed with conventional word-asynchronous optical sampling is shown in Fig. 3. It is obvious from the almost closed eye that the underlying signal has only poor quality. The FWHM of the pulses is estimated from this diagram as 2.4 ps. This is slightly longer than the 1.8 ps at the source laser output due to chromatic dispersion in the passive fibers and the EDFA in the data stream path. Besides this global information on the quality of the signal by analysis of the shape of the eye diagram, no details of individual bits are identifiable in this representation.

As mentioned in the Introduction, it is more useful instead to visualize the actual waveform of the entire data word (or of a sequence of consecutive bits in a long data word). The advantage of this kind of representation (Fig. 4) becomes obvious if compared with the eye diagram in Fig. 3: Individual bits with their neighbors can now be identified, and their waveform can be analyzed. For example, the bits in the third to the sixth time slot may lead to bit errors if the threshold level for a "1" bit is set too low.

The waveform shown in Fig. 4 was visualized by word-synchronous sampling with an equivalent-time infeed of $\Delta T = 1/1024\ T_{\rm bit}$, i.e., the waveform consists of 1024 samples per time slot. With (9), this infeed leads to the use of the $H = 177$th harmonic of $f_{\rm rep}$ and to the exact (rounding error free) 48-bit tuning word $M = 29687082385408$.

It should be noted that word-synchronous sampling can be applied to arbitrary data words which are periodically repeated. It is not restricted to a PRBS pattern or to specific word lengths, as long as $K \geq 1$ is satisfied, i.e., $f_{\rm s} \leq f_{\rm bit}/L$.

For an analysis of systematic bit errors, it is important that the partial sequence in the vicinity of the bit error can be addressed. Here, we only briefly want to indicate two possible solutions to this problem. In most cases, it may be enough to use only the partial sequence as the repeated data word, which is to be analyzed. A second approach is to map the recorded waveform to the corresponding position in the PRBS word by identification of the correlation peak between the waveform and a bit-shifted PRBS word. The information about the peak position can then be used to feed an according phase shift to the DDS circuit. Identification of the correlation peak position was also used in Fig. 4 to map the bits of the recorded waveform to the corresponding bits in the electrical driving signal applied to the MZM (gray shading for "1" and white shading for "0" bit).

Another benefit of the described scheme is its flexibility, i.e., any synchronization mode can be achieved by programming the DDS tuning word, enabling problem-specific synchronization. One example is the demonstrated word-synchronous sampling with an infeed in equivalent time for waveform visualization, and another one is word-synchronous sampling without an equivalent-time infeed for statistical measurements at a certain position of a specific bit in the data word. This is important for long-term monitoring, e.g., of amplitude fluctuations at the bit's peak value, or of timing fluctuations, i.e., slope-detection jitter measurements at half the peak value [16].

The result of such an experiment with a 40-Gb/s data stream consisting exclusively of "1" bit (i.e., a nonmodulated pulse train at 40 GHz) is shown in Fig. 5. Before recording was started, the DDS tuning word was chosen for word-synchronous sampling with a small equivalent time infeed, i.e., with a slow sweep. When the peak value was reached, sweeping was stopped by setting the tuning word to the value required for exact word synchronism ($M_1 = 29686813949952$), and recording was started. Since there is no sweep, the equivalent time remains at its initial value $t_{\rm eq} = 0$; until after approximately $t_{\rm real} \approx 34$ s measurement time, the tuning word was changed to $M_2 = 29686813982720$, corresponding to an equivalent time infeed of $\Delta T = T_{\rm bit}/2^{23}$. As a result, the waveform is sampled at $2^{23} \approx 8.4 \times 10^6$ data points per time slot until $t_{\rm real} \approx 110$ s, when the half-peak value was approximately reached. At $t_{\rm real} \approx 110$ s, the tuning word was set to M_1 again, and sweeping was stopped while the remaining data points were recorded. From the data, the residual timing jitter of the synchronization between the sampling pulse train and the data stream can be determined. The advantage of this problem specific-sweeping approach is that, in contrast to the determination of the timing jitter from the corresponding eye diagram, mainly the data points representing the fluctuations at the peak and near the half-peak value (gray shaded areas in Fig. 5) are sampled. The standard deviations of the fluctuations at the peak value $\overline{P}_1 = 1$ arb.unit and at the working point for slope detection $\overline{P}_2 = 0.56$ arb.units are determined as $\sigma_{P,1} = 0.084$ arb.units and $\sigma_{P,2} = 0.059$ arb.units, which are based on more than 7.4×10^6 data points, respectively. The central part of Fig. 5 showing the waveform provides information on the slope k at the working point of the slope detector and on the detection noise. A slope of $k = 2015$ fs/arb.unit (see red auxiliary line) and a detection noise of $\sigma_{\rm min} = 0.013$ arb.units. have been determined. Finally, assuming independent fluctuation processes, the residual timing jitter $\sigma_{\rm t}$ results as [16]

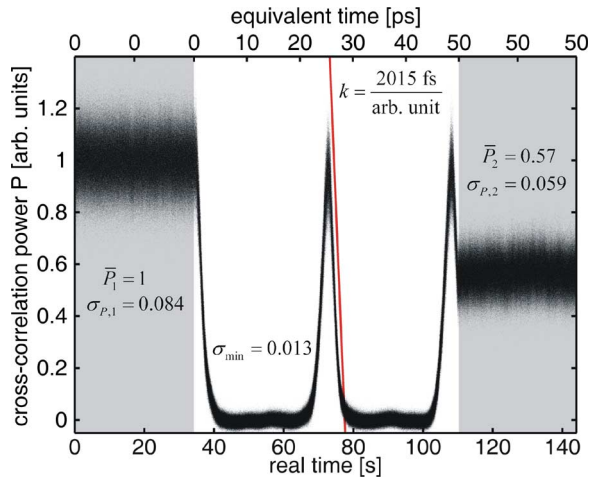

Fig. 5. Slope-detection jitter measurement. During the 144-s measurement time, more than 31.6 million data points were recorded (only every seventh data point is plotted in the figure, which does not noticeably alter its appearance). The cross-correlational power on the ordinate is normalized to the average value at the peak $\overline{P}_1$. In the gray-shaded areas, sweeping was stopped, and accordingly, equivalent time does not change while real time proceeds. The red auxiliary line has the same slope k as the trailing edge of the waveform at the working point $\overline{P}_2$ of slope detection (see text for more details.)

$$\sigma_{\rm t} = k\sqrt{\sigma_{P,2}^2 - \overline{P}_2^2\left(\sigma_{P,1}^2 - \sigma_{\rm min}^2\right) - \sigma_{\rm min}^2} \approx 69\ \text{fs} \qquad (13)$$

where the contribution of amplitude and detection noise has been taken into account.

V. Conclusion

We have demonstrated a novel type of PLL, which includes a DDS circuit allowing optical sampling of high bit rate OTDM signals. Programming the DDS tuning word enables flexible realization of different synchronization scenarios. In particular, the visualization of the true waveform of repetitive data words was demonstrated using word-synchronous sampling.

In a slope-detection experiment, further advantages of problem-specific sweeping with the DDS-based PLL have been demonstrated, and a residual synchronization timing jitter of 69 fs has been determined.

Acknowledgment

The authors would like to thank SHF Communication Technologies AG, Berlin-Marienfelde, Germany, for the loan of the bit-error-rate test system.

References

[1] M. Nakazawa, T. Yamamoto, and K. R. Tamura, "1.28 Tb/s-70 km OTDM transmission using third- and fourth-order simultaneous dispersion compensation with a phase modulator," *Electron. Lett.*, vol. 36, no. 24, pp. 2027–2029, Nov. 2000.

[2] M. Westlund, H. Sunnerud, M. Karlsson, and P. A. Andrekson, "Software-synchronized all-optical sampling for fiber communications systems," *J. Lightw. Technol.*, vol. 23, no. 3, pp. 1088–1099, Mar. 2005.

[3] N. Yamada, H. Ohta, and S. Nogiwa, "Polarization-insensitive optical sampling system using two KTP Crystals," *IEEE Photon. Technol. Lett.*, vol. 16, no. 1, pp. 215–217, Jan. 2004.

[4] M. Westlund, P. A. Andrekson, H. Sunnerud, J. Hansryd, and J. Li, "High-performance optical-fiber-nonlinearity-based optical waveform monitoring," *J. Lightw. Technol.*, vol. 23, no. 6, pp. 2012–2022, Jun. 2005.

[5] I. Kang and K. Dreyer, "Sensitive 320 Gb/s eye diagram measurements via optical sampling with semiconductor optical amplifier-ultrafast nonlinear interferometer," *Electron. Lett.*, vol. 39, no. 14, pp. 1081–1083, Jul. 2003.

[6] C. Dorrer, D. C. Kilper, H. R. Stuart, G. Raybon, and M. G. Raymer, "Linear optical sampling," *IEEE Photon. Technol. Lett.*, vol. 15, no. 12, pp. 1746–1768, Dec. 2003.

[7] E. Benkler, H. R. Telle, K. Weingarten, L. Krainer, G. Spühler, and U. Keller, "Characterization of ultrashort optical pulse properties by amplitude-modulation-balanced heterodyne gating," *Opt. Lett.*, vol. 30, no. 15, pp. 2016–2018, Aug. 2005.

[8] C. Dorrer, "Monitoring of optical signals from constellation diagrams measured with linear optical sampling," *J. Lightw. Technol.*, vol. 24, no. 1, pp. 313–321, Jan. 2006.

[9] C. Dorrer, "High-speed measurements for optical telecommunication systems," *IEEE J. Sel. Topics Quantum Electron.*, vol. 12, no. 4, pp. 843–858, Jul./Aug. 2006.

[10] M. Attygalle and Y. J. Wen, "Injection-locked Fabry–Pérot laser with electronic feedback for clock recovery from high-speed OTDM signals," *IEEE Photon. Technol. Lett.*, vol. 18, no. 3, pp. 478–480, Feb. 2006.

[11] L. Cordesses, "Direct digital synthesis: A tool for periodic wave generation (Part 1)," *IEEE Signal Process. Mag.*, vol. 21, no. 4, pp. 50–54, Jul. 2004.

[12] L. Cordesses, "Direct digital synthesis: A tool for periodic wave generation (Part 2)," *IEEE Signal Process. Mag.*, vol. 21, no. 5, pp. 110–112, Sep. 2004.

[13] L. Krainer, R. Paschotta, G. J. Spühler, I. Klimov, C. Teisset, K. J. Weingarten, and U. Keller, "Tunable picosecond pulse-generating laser with a repetition rate exceeding 10 GHz," *Electron. Lett.*, vol. 38, no. 5, pp. 225–227, Feb. 2002.

[14] H. Hundertmark, D. Kracht, M. Engelbrecht, D. Wandt, and C. Fallnich, "Stable sub-85 fs passively mode-locked Erbium fiber oscillator with tunable repetition rate," *Opt. Express*, vol. 12, no. 14, pp. 3178–3183, Jul. 2004.

[15] A. Bartels, S. A. Diddams, C. W. Oates, G. Wilpers, J. C. Bergquist, W. H. Oskay, and L. Hollberg, "Femtosecond-laser-based synthesis of ultrastable microwave signals from optical frequency references," *Opt. Lett.*, vol. 30, no. 6, pp. 667–669, Mar. 2005.

[16] S. Nogiwa, Y. Kawaguchi, H. Ohta, and Y. Endo, "Generation of gain-switched optical pulses with very low timing jitter by using external CW-light injection seeding," *Electron. Lett.*, vol. 36, no. 3, pp. 235–236, Feb. 2000.

Erik Benkler was born in Heidelberg, Germany, in 1973. He received the M.Sc. and Ph.D. degrees in physics from Darmstadt University of Technology, Darmstadt, Germany, in 1999 and 2004, respectively.

Since 2004, he has been with the German National Metrology Institute, Physikalisch-Technische Bundesanstalt, Braunschweig, Germany, where he works as a Researcher in the field of optical femtosecond metrology.

Dr. Benkler is a member of the German Physical Society and of the Optical Society of America.

Harald R. Telle, photograph and biography not available at the time of publication.