4th EFCA Ultrafine Particles Symposium 2013, 16th – 17th May, 2013, Brussels, Belgium

Physikalisch-Technische Bundesanstalt

Development of a German national aerosol standard for mass concentration and number concentration of soot particles

TECHNISCHE UNIVERSITÄT DARMSTADT

Center of Smart Interfaces

Andreas Nowak[1], Gert Lindner[1], Anke Jordan-Gerkens[1], Arne Kuntze[1], Margit Hildebrandt[1], Norbert Böse[1], Volker Ebert[1,2]

corresponding author: andreas.nowak@ptb.de

[1] Physikalisch-Technische Bundesanstalt, Bundesallee 100, 38116 Braunschweig, Germany ; [2] Center of Smart Interfaces, TU Darmstadt, Petersenstraße 32, 64287 Darmstadt, Germany

Introduction

➢ One of the major contributors to ultrafine particles (< 100 nm) in urban areas is soot, which is mainly emitted by automotive combustion process. Soot particle emissions have a high variability in number concentration as well as mass concentration and are chemically dominated by black carbon. Due to their morphological structure, they efficiently uptake organic vapors, which further increases their toxicity level.

➢ A key factor for the air quality regulation and minimization of their health effects is a European harmonized calibration infrastructure for measurements of aerosol properties such as particle number concentration , particle mass concentration and particle size distribution.

Standard for Mass Concentration Setup

• Using different diagnostic devices to determine linear correlation factors between absorption coefficient (k) and soot mass concentration (m)

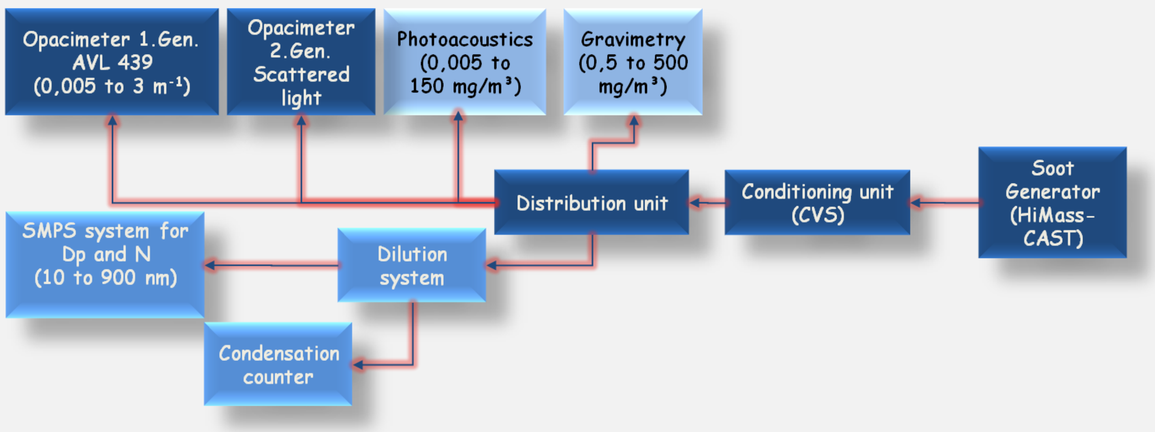

• The following diagnostic instruments are implemented:
Opacimeter (AVL 439) as reference system, Scanning mobility particle spectrometer (non-commercial SMPS), Engine exhaust condensation particle counter (EECPC, TSI) Unit for loading of filters (gravimetrical mass) and Photoacoustic sensor (AVL 483)

→ **Goal:** Operating a primary standard for mass concentration

Standard for Number Concentration Setup

• Currently different types of condensation particle counter (variable in cut off diameter) installed to determine counting efficiency for several aerosol types like soot, silver and emery oil

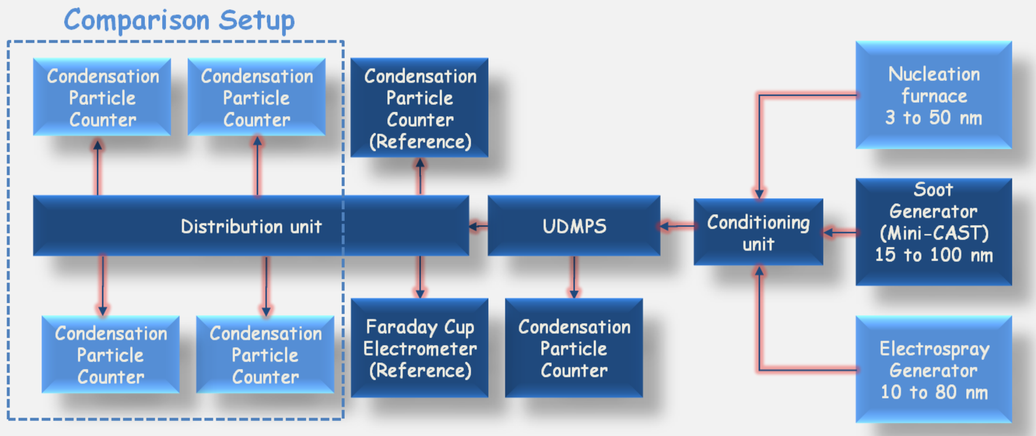

• The following instruments will be implemented:
An Farady cup aerosol electrometer (FCAE, 3068 B, TSI) as reference system, Condensation particle counter (3772 CPC, TSI, Dp_{50} at 11 nm), engine exhaust condensation particle counter (3790 EECPC, TSI, Dp_{50} at 23 nm) and an Ultrafine particle mobility spectrometer (non-commercial UDMPS) for selecting of monodisperse particle in range from 3 to 100 nm

→ **Goal:** Developing a metrological standard for number concentration

Conditioning and Generation of Soot Mass Concentration

• Installed a modified HiMass-CAST (Jing Ltd) to generate „diesel like“ soot aerosols in size range from 70 nm to 200 nm

• To provide a homogeneous soot aerosol with high dynamic range and temporal stability.

• New conditioning unit (counter flow mixer) for dilution was developed and investigated in an internal PTB cooperation.

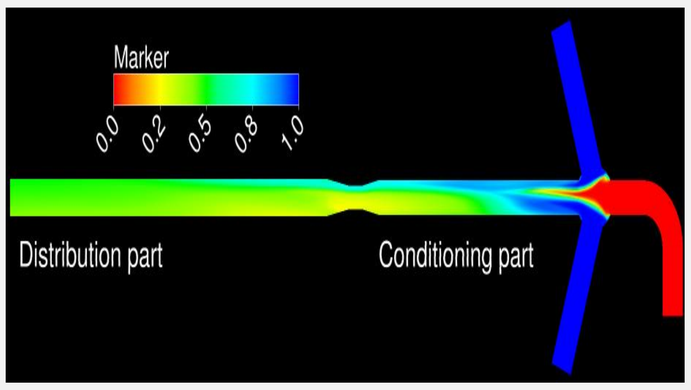

CFD simulation of mixing between dilution air (blue) and soot aerosols (red), green indicates homogeneous soot dilution

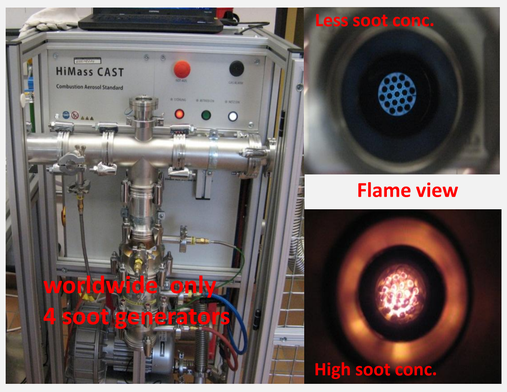

HiMass-CAST in different operating modes

Conditioning and Generation of Soot Number Concentration

• A Mini-CAST (Jing Ltd) is currently operating in the setup to generate „diesel like“ soot aerosols in size range from 10 nm to 100 nm.

• To provide a ultrafine soot aerosol with high concentration range and temporal stability.

• New conditioning unit for dilution (turbulent cross flow mixer) was developed.

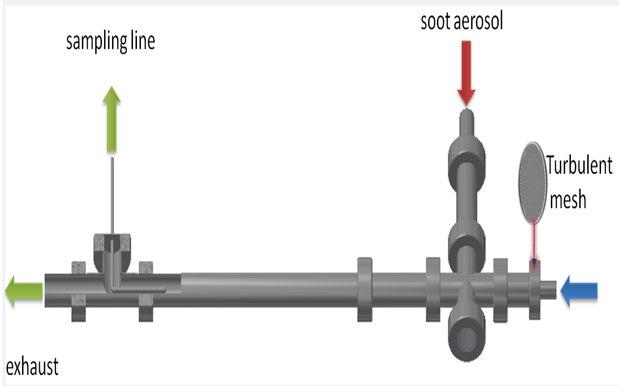

Scheme of aerosol conditioning, dilution air (blue) and soot aerosols (red)

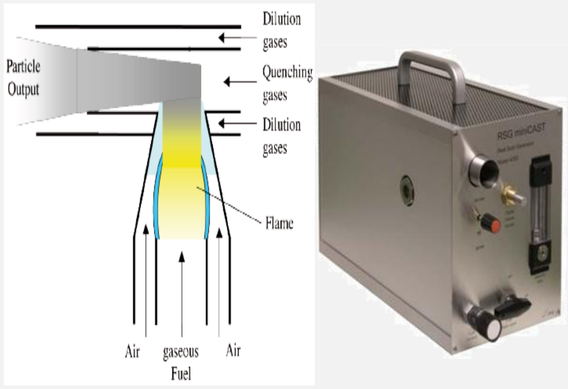

Process scheme of a single flame and the diffusion flame generator (Mini-CAST)

Results of Soot Mass Concentration

• Recently, two campaigns were performed to analyze k and m in the range from 0.01 (1 mg/m³) to 3.0 m⁻¹ (500 mg/m³) using the new light scattering devices.

• The results showed a good correlation for k between the reference opacimeter, gravimetrical mass and the novel instruments.

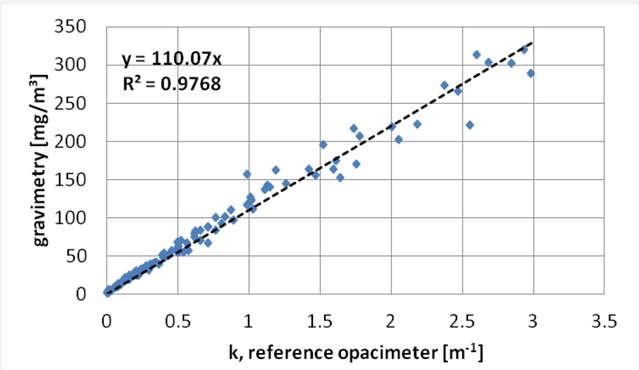

Comparison between reference opacimeter (AVL 439) and gravimetrical mass

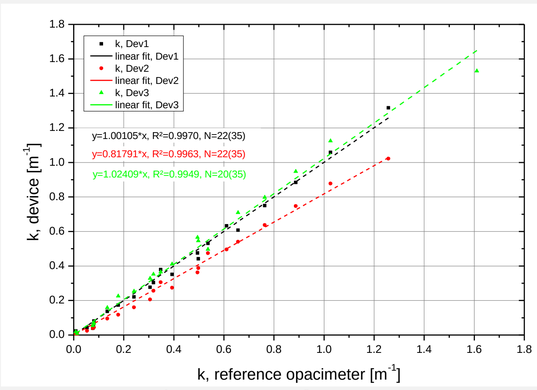

Comparison between reference opacimeter (AVL 439) and three light scattering devices

→ **Realized measurements for m and k by reference instruments like opacimeter and gravimetrical mass**

First Results of Soot Number Concentration

• The first results showed very narrow polydispers particle number size distribution (PNSD) selected for a PMP conform size range and to avoid multi charged particles.

• High particle number concentration ($9x10^5$) of soot aerosols allows simultaneous comparison of several CPCs.

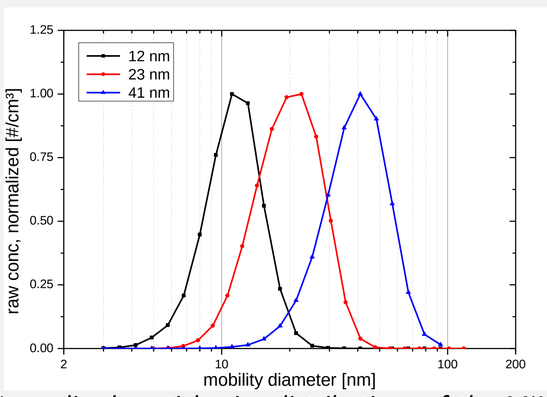

Normalized particle size distributions of the MINI-CAST generator for different operation points

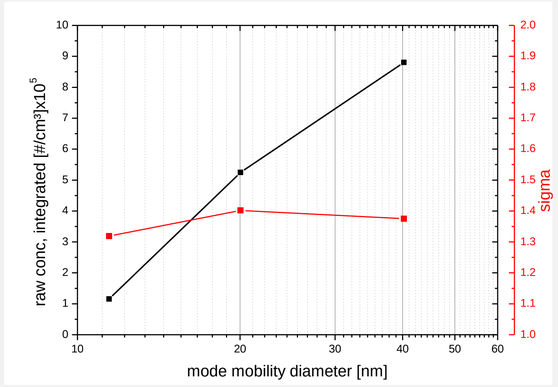

Gaussian Fit paramter of PNSD for mode diameter, sigma and integral raw concentration

→ **Validate measurements for number concentration by FCAE**

Conclusion and Outlook

➢ The PTB infrastructure which is currently setup is based on two combustion based soot generators (Mini CAST and a modified HiMass CAST) running on propane, which are able to generate soot with diffusion flames. The infrastructure is intended to ensure at PTB a highly stable, accurately characterized soot generators that allows well defined soot aerosols and particle parameter variations.

➢ Calibration and standardisation procedures are developed to allow valid comparisons between different techniques, and to determine uncertainties reliably.

➢ Further project for cooperation are still planning for soot mass and soot concentration.

➢ The final step will be transferring the current standard into a national standard in terms of uncertainty budget for mass and number concentration.

Parts of this work have been funded by German Garage Equipment Association (ASA) and the European Metrology Research Programme (EMRP) in “ENV02 PartEmission” (WP1)